Dimensioni d'ingombro
L'illustrazione raffigura le dimensioni di massima del gruppo comandi e i punti di fissaggio.

Overall dimensions
The illustration shows the approximate dimensions of the control unit and the mounting points.

Dimensions hors-tout
L'illustration représente les dimensions hors-tout groupe de commandement et les points de fixation.

Außenmaße
Die Abbildung zeigt die Außenmaße der Befehlsgruppe und die Befestigungspunkte.

Dimensiones
La ilustración presenta las dimensiones generales grupo de mando y los puntos de fijación.

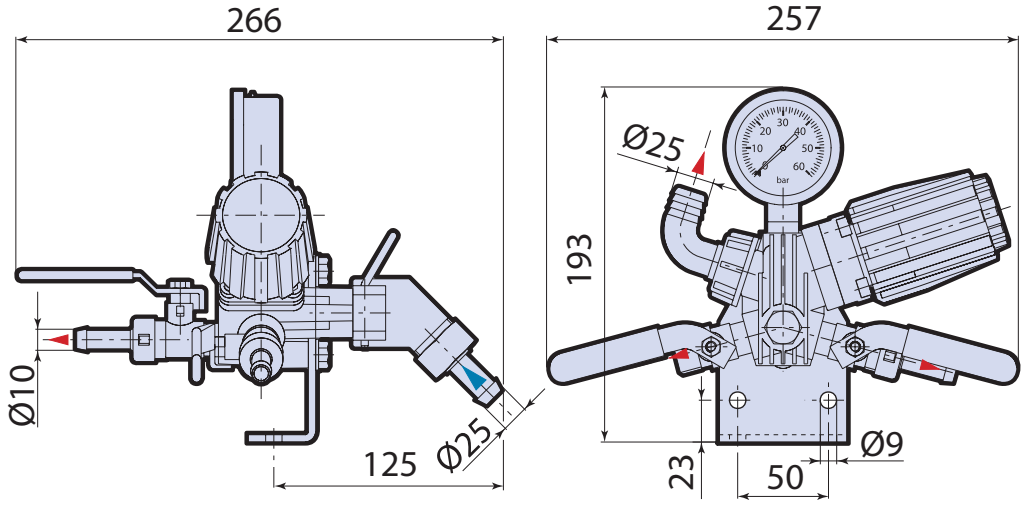

DI_1158508

RM 40

920 RM 40

920

C

D

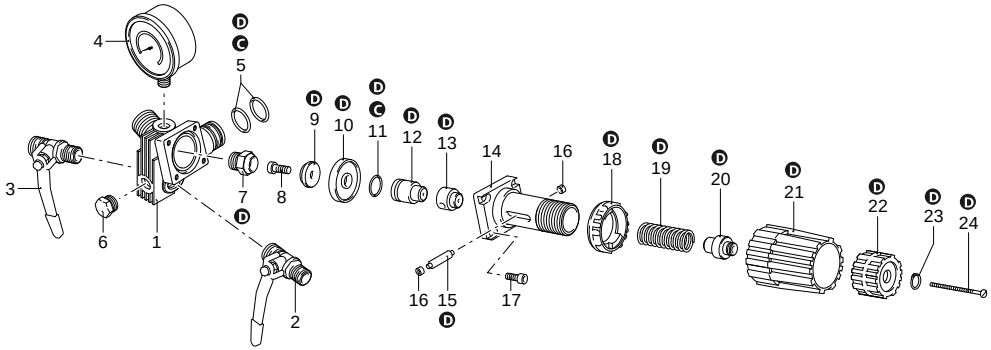

	Code	Description		Q	Note
1	1150500	Valve body		1	
2	130491	Valve	3/8” G - 1/2” G (M-M)	1	C=20Nm / Loxeal 55-14
3	130492	Valve	3/8” G - 1/2” G (M-M)	1	C=20Nm / Loxeal 55-14
4	550545	Pressure gauge	Ø63 - 0÷80bar	1	
5	390180	O-ring	Ø 18,72x2,62	2	Lubricate with motor oil
6	130171	Plug	3/8” G	1	C=20Nm / Loxeal 55-14
7	1150520	Seat		1	C=20Nm / Loxeal 55-14
8	680560	Screw	TCEI M6x16	1	C=10Nm / Loxeal 55-14
9	1040640	Valve		1	
10	1040631	Diaphragm	NBR - Øe 40	1	
11	880830	O-ring	Ø 15,54x2,62	1	Lubricate Molykote G-807
12	1040621	Piston		1	
13	1150560	Spacer		1	
14	1150510	Body	upper	1	
15	1150540	Hub pin		1	
16	1150600	Ring		2	
17	780330	Screw	TCEI M6x20	4	C=10Nm
18	1150530	Ring nut		1	Lubrificate with Mineral Grease
19	394760	Spring		1	
20	1150660	Spacer		1	
21	1150550	Knob		1	
22	1150570	Ring nut		1	
23	480550	Ring	seeger Øe 12	1	
24	1150650	Screw	TCTC M3x60	1	C=5Nm / Loxeal 55-14
C	1988	O-ring kit		1	
D	1989	Maintenance repair kit	NBR	1	
920	920	Control units		1	

AR_05_037_v01

Customer: AR

Customer Code:

Revision: 1

Date: 26/08/2023